*527.210 / *527.310 **FRYER** - EXPLODED VIEW

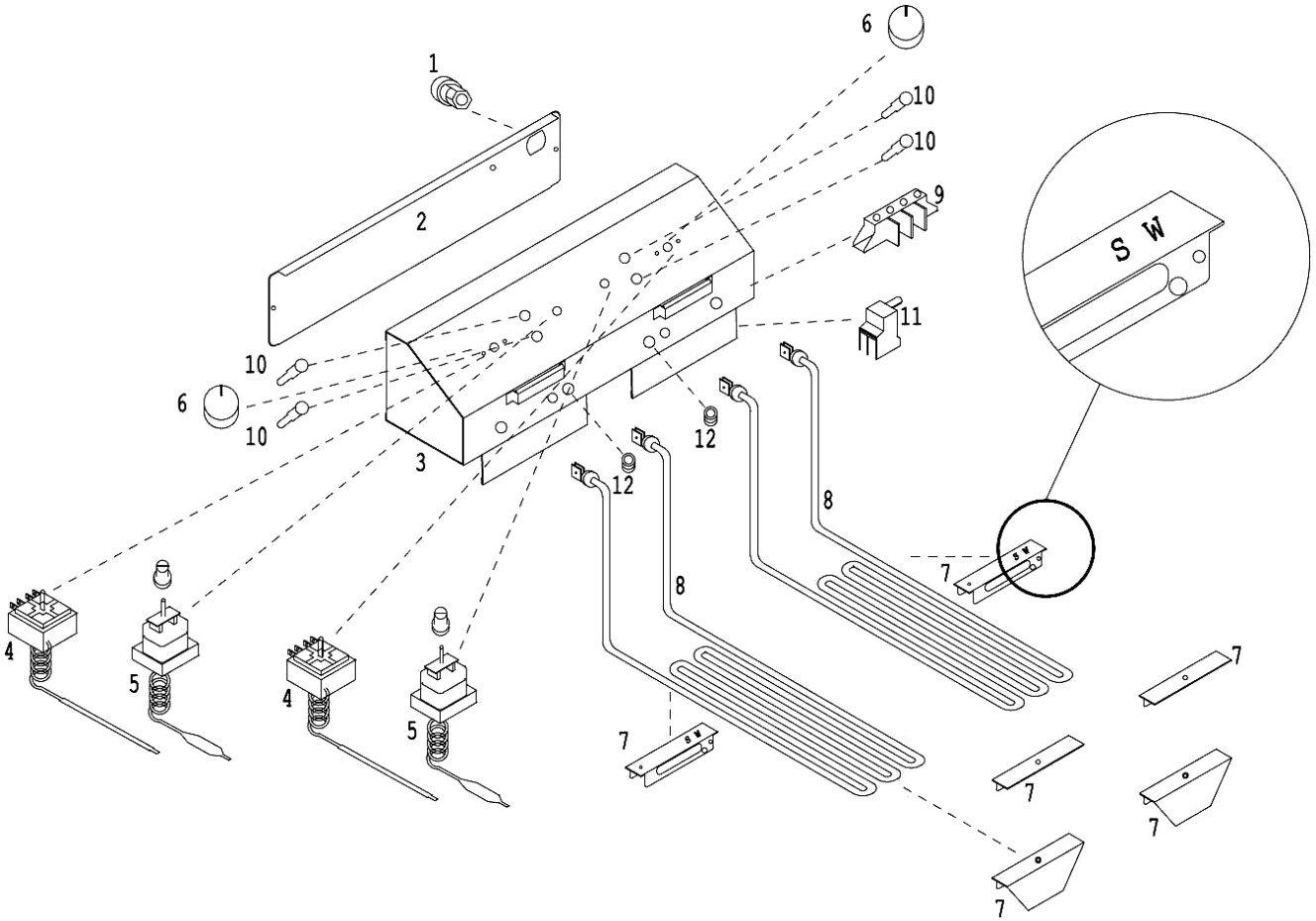

NO	CODE	DESCRIPTION
	1040	complete control head
1	1126	cablepress
2	***	cover
3	***	body head
4	1155T	single-phase Switch thermostat
5	1153T	single-phase Safety thermostat
6	1183	Knob
7	1054	fixing brackets
8	1059	Heating element Kw.3,65
9	1170A	terminal block
10	1172A-1172V	light
11	1159B	switch
12	1157	sealing gasket
	***	specify fryer model